UNIVERSITY OF CAMBRIDGE INTERNATIONAL EXAMINATIONS
General Certificate of Education
Advanced Subsidiary Level and Advanced Level

CANDIDATE NAME									
CENTRE NUMBER						CANDIDATE NUMBER				

4400931107

PHYSICS **9702/32**

Paper 3 Advanced Practical Skills 2 **May/June 2012**

2 hours

Candidates answer on the Question Paper.

Additional Materials: As listed in the Confidential Instructions.

READ THESE INSTRUCTIONS FIRST

Write your Centre number, candidate number and name on all the work you hand in.
Write in dark blue or black pen.
You may use a soft pencil for any diagrams, graphs or rough working.
Do not use staples, paper clips, highlighters, glue or correction fluid.
DO **NOT** WRITE IN ANY BARCODES.

Answer **both** questions.
You will be allowed to work with the apparatus for a maximum of one hour for each question.
You are expected to record all your observations as soon as these observations are made, and to plan the presentation of the records so that it is not necessary to make a fair copy of them.
You may lose marks if you do not show your working or if you do not use appropriate units.

Additional answer paper and graph paper should be submitted only if it becomes necessary to do so.
You are reminded of the need for good English and clear presentation in your answers.

At the end of the examination, fasten all your work securely together.
The number of marks is given in brackets [ ] at the end of each question or part question.

For Examiner's Use	
1	
2	
Total	

This document consists of **10** printed pages and **2** blank pages.

© UCLES 2012

You may not need to use all of the materials provided.

For Examiner's Use

1 In this experiment, you will investigate the equilibrium position of a suspended mass.

The apparatus has been set up as shown in Fig. 1.1.

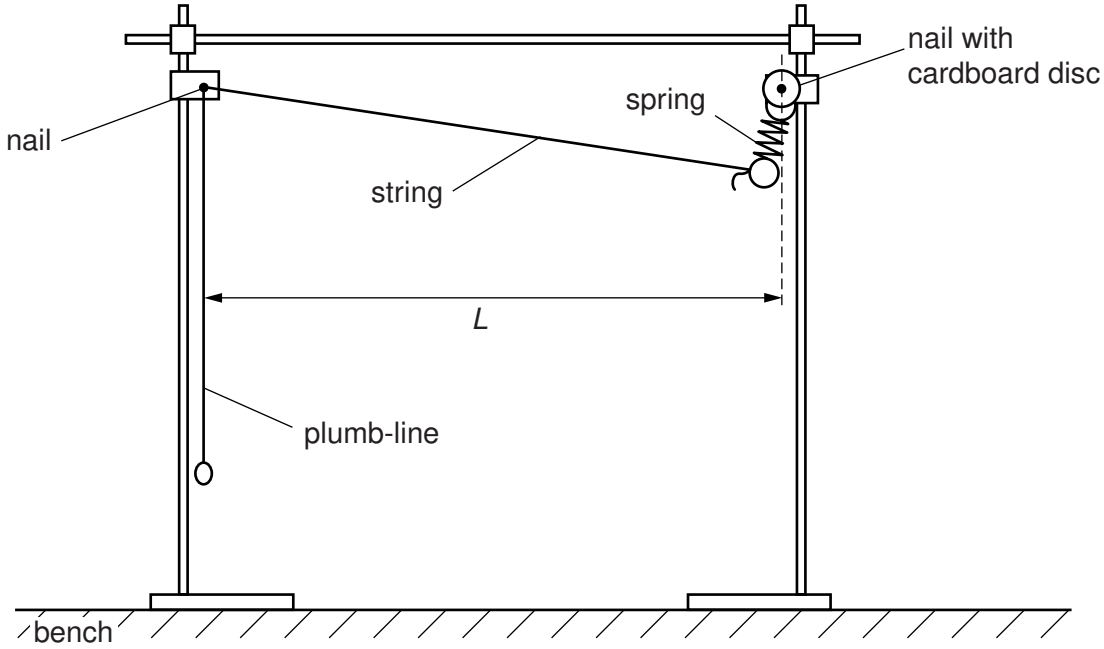

Fig. 1.1

(a) Measure and record the distance *L* between the two nails.

L = ... m [1]

(b) (i) Attach the crocodile clip to the string so that the string passes through the gap between the jaws of the crocodile clip, as shown in Fig. 1.2.

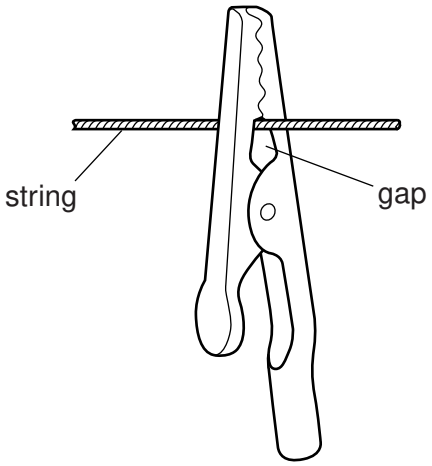

Fig. 1.2

Suspend the mass hanger and masses from the loop attached to the crocodile clip. Adjust the position of the crocodile clip so that the distance *d* from the plumb-line to the string loop is about 30 cm, as shown in Fig. 1.3.

For Examiner's Use

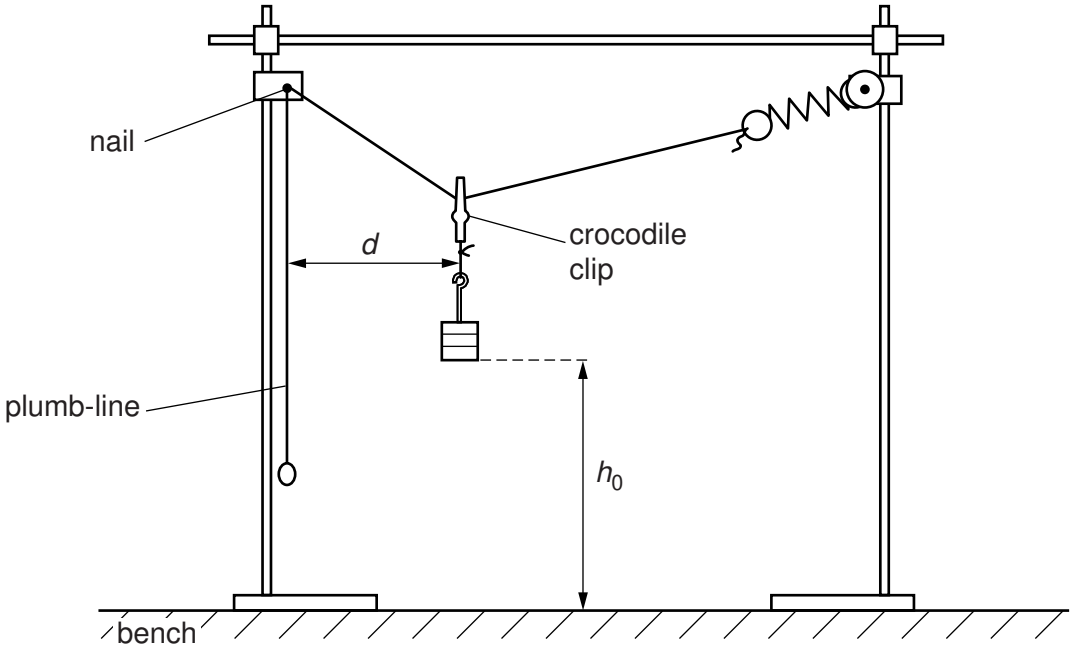

Fig. 1.3

(ii) Measure and record *d.*

d = ... m

(iii) Measure and record the initial height h_0 of the bottom of the mass above the bench, as shown in Fig. 1.3.

h_0 = ... m [1]

(c) Reduce d by moving the crocodile clip **closer** to the plumb-line, ensuring that the string passes through the gap as shown in Fig. 1.2. Measure and record d and the new height h of the bottom of the mass above the bench. Repeat until you have six sets of values for d and h, with d in the range 5 cm to 30 cm.

Include values of $\left(\frac{L}{2} - d\right)^2$ and $(h - h_0)$ in your table.

For Examiner's Use

[10]

(d) (i) Plot a graph of $\left(\frac{L}{2} - d\right)^2$ on the y-axis against $(h - h_0)$ on the x-axis. [3]

(ii) Draw the straight line of best fit. [1]

(iii) Determine the gradient and y-intercept of this line.

gradient = ...

y-intercept = ...

[2]

© UCLES 2012

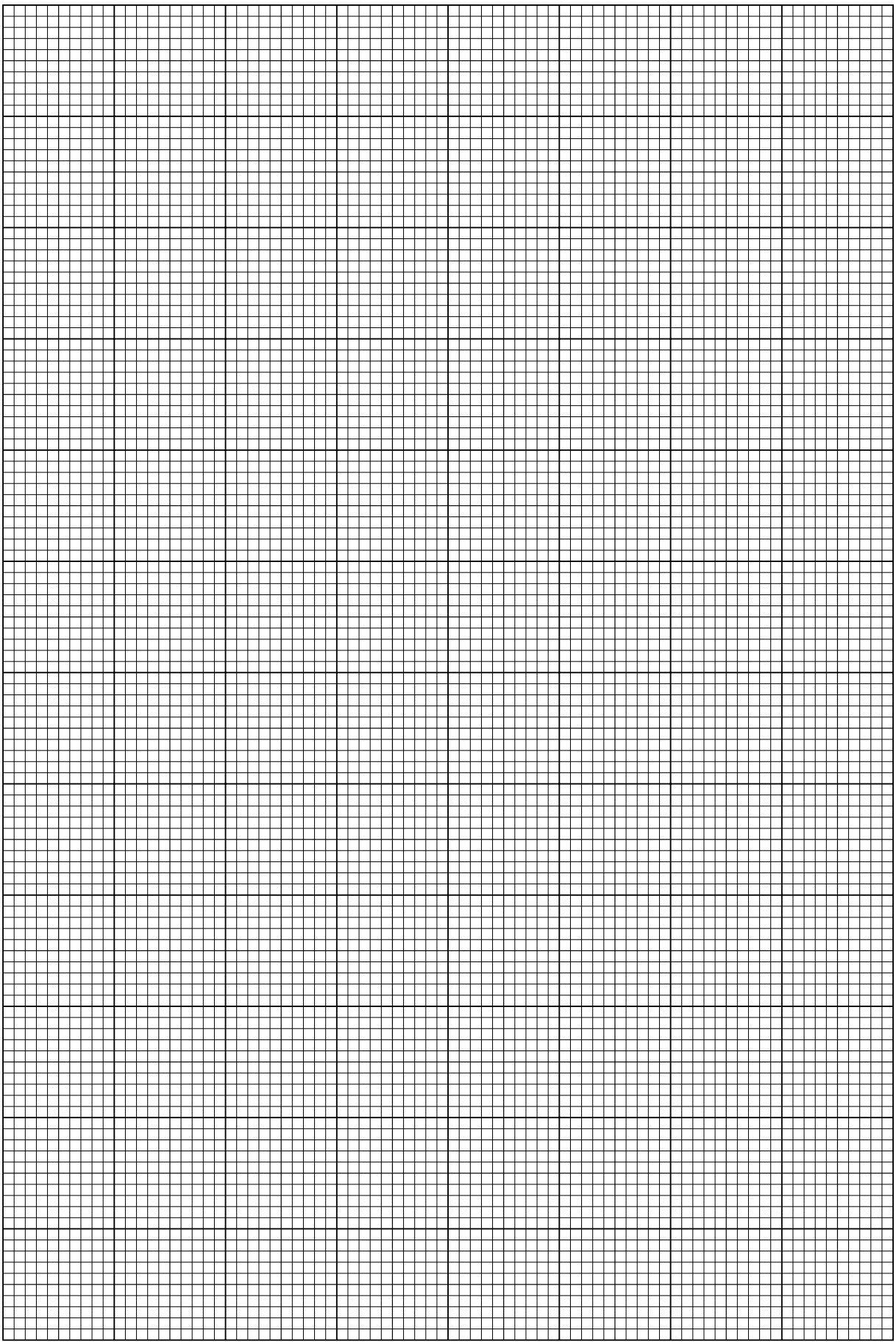

For Examiner's Use

(e) The relationship between d and h is

$$\left(\frac{L}{2} - d\right)^2 = a(h - h_0) + b$$

where a and b are constants.

Using your answers from **(d)(iii)**, determine the values of a and b.
Give appropriate units.

For Examiner's Use

a = ...

b = ...
[2]

BLANK PAGE

Please turn over for Question 2.

You may not need to use all of the materials provided.

For Examiner's Use

2 In this experiment, you will investigate the adhesive strength of Blu-Tack.

(a) (i) You have been provided with two plastic rulers, one with a loop of string attached. Take the ruler without string and clamp it along the edge of the bench with a flat face uppermost.

(ii) Use some of the Blu-Tack to make a ball of diameter about 8 mm.

(iii) Using the calipers provided, measure and record the diameter of the ball.

ball diameter = ...

(iv) Place the ball of Blu-Tack on the clamped ruler with a thin rod each side of it. Press the flat face of the second ruler on to the Blu-Tack until the ruler touches the rods. The Blu-Tack will form a disc, as shown in Fig. 2.1.

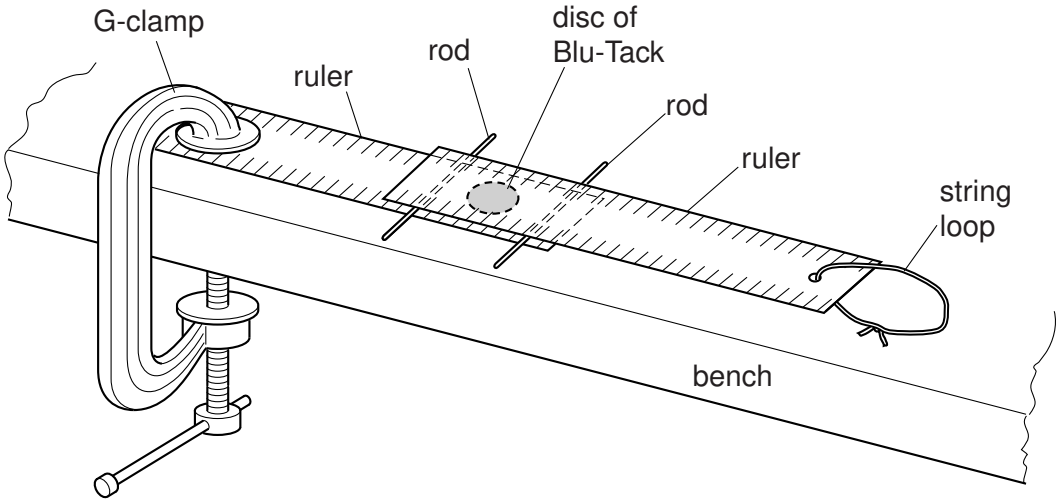

Fig. 2.1

(b) (i) Measure and record the diameter *d* of the disc of Blu-Tack.

d = ... [2]

(ii) Estimate the percentage uncertainty in *d*.

For Examiner's Use

percentage uncertainty = ... [1]

(iii) Calculate the contact area *A* using $A = \frac{\pi d^2}{4}$.

A = ... [1]

(c) (i) Attach the newton-meter to the string loop and lay it horizontally on the bench.

(ii) Pull the newton-meter horizontally (parallel to the rulers). Measure and record the force *F* when the top ruler detaches.

F = ... [2]

(d) (i) Remove the Blu-Tack from the rulers.

(ii) Make a ball with a slightly different diameter and repeat **(a)(iii)**, **(a)(iv)**, **(b)(i)**, **(b)(iii)** and **(c)**.
You should be aware that a large change in diameter could result in a reading outside the range of the newton-meter.

ball diameter = ...

d = ... [1]

A = ... [1]

F = ... [2]

© UCLES 2012

(e) It is suggested that the relationship between F and A is

$$F = kA$$

where k is a constant.

(i) Using your data, calculate two values of k.

first value of k = ...

second value of k = ...

[1]

(ii) Explain whether your results support the suggested relationship.

.....

.....

.....

.....

.....[1]

For Examiner's Use

(f) (i) Describe four sources of uncertainty or limitations of the procedure for this experiment.

For Examiner's Use

1. .....

.....

2. .....

.....

3. .....

.....

4. .....

.....

[4]

(ii) Describe four improvements that could be made to this experiment. You may suggest the use of other apparatus or different procedures.

1. .....

.....

2. .....

.....

3. .....

.....

4. .....

.....

[4]

© UCLES 2012

BLANK PAGE

Permission to reproduce items where third-party owned material protected by copyright is included has been sought and cleared where possible. Every reasonable effort has been made by the publisher (UCLES) to trace copyright holders, but if any items requiring clearance have unwittingly been included, the publisher will be pleased to make amends at the earliest possible opportunity.

University of Cambridge International Examinations is part of the Cambridge Assessment Group. Cambridge Assessment is the brand name of University of Cambridge Local Examinations Syndicate (UCLES), which is itself a department of the University of Cambridge.

© UCLES 2012